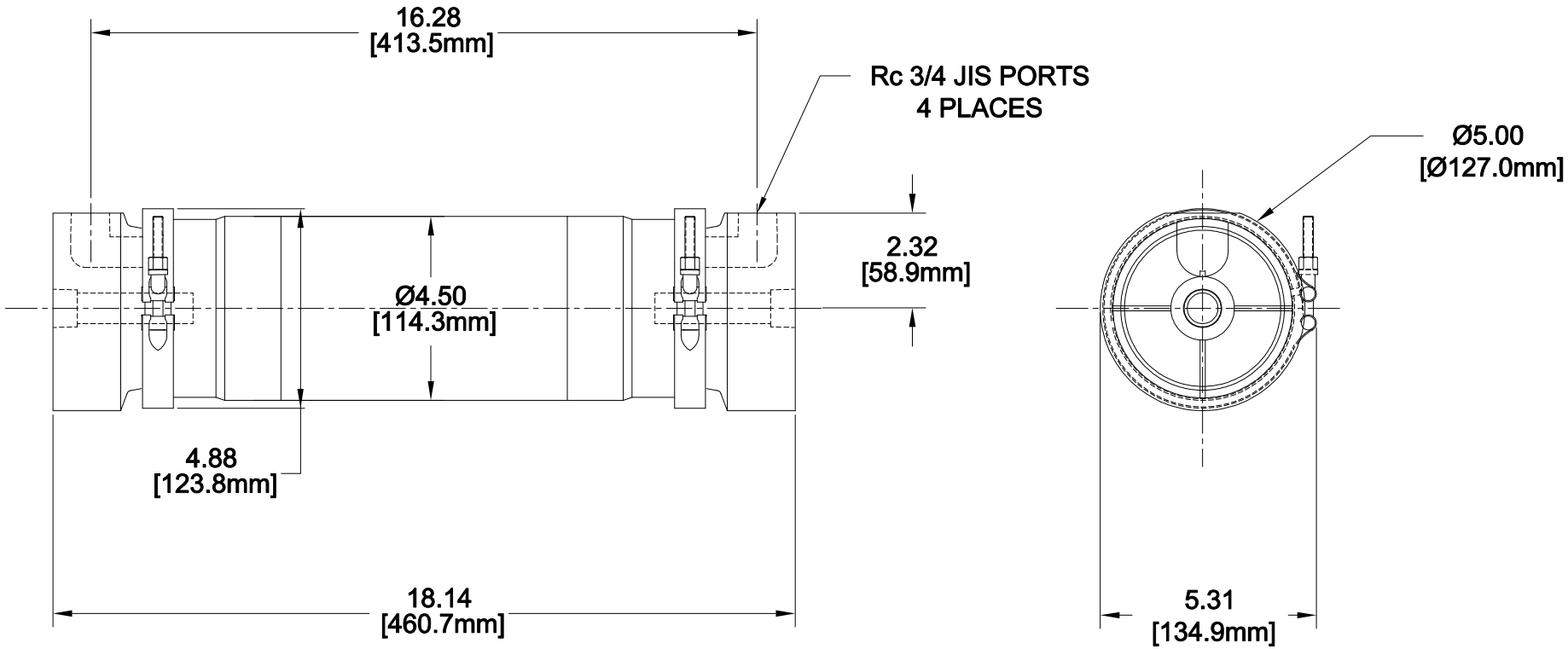

REV	DESCRIPTION	DRAWN BY	CHKR	APVD	APVD	D R
1	UPDATE CLAMPS AND FORMAT	SDM				06-04

DIMENSIONAL TOLERANCES APPLY UNLESS OTHERWISE SPECIFIED

DIMENSIONAL TOLERANCES-INCHES(1)	DIMENSIONAL TOLERANCES MILLIMETERS
1 DECIMAL PLACE ±.06	0 DECIMAL PLACES ±1.5
2 DECIMAL PLACES ±.02	1 DECIMAL PLACE ±.5
3 DECIMAL PLACES ±.005	2 DECIMAL PLACES ±.12

ANGULAR DIMENSIONS ±0°30"

1. REF:ANSI STD Y14.5
2. POSITIONAL TOLERANCES AND RELATED DATUMS APPLY AT MMC
3. MMC-MAXIMUM MATERIAL CONDITION
4. RFS-REGARDLESS OF FEATURE SIZE
5. PERFECT FORM REQUIRED AT MMC

TOLERANCES OF FORM AND POSITION (1) (2) (5)

FLATNESS	▱	PERPENDICULARITY	⊥
STRAIGHTNESS	—	ANGULARITY	∠
CIRCULARITY	○	CIRCULAR RUNOUT	↗
CYLINDRICITY	⌭	POSITION	⊕
PROFILE OF ANY LINE	⌒	CONCENTRICITY/COAXIALITY	◎
PROFILE OF ANY SURFACE	⌓	SYMMETRY	⌯
PARALLELISM	//	FEATURE CONTROL SYMBOL(EXAMPLE)	●

THE INFORMATION CONTAINED HEREIN IS CONFIDENTIAL. SUCH INFORMATION IS THE PROPERTY OF MEMBRANA AND MAY NOT BE USED BY, OR DISCLOSED TO OTHERS WITHOUT THE PRIOR WRITTEN CONSENT OF MEMBRANA. THE INFORMATION CONTAINED HEREIN MAY NOT BE USED FOR ANY PURPOSE OTHER THAN THE EXPRESSED INTENT FOR WHICH IT WAS LENT. ©2002 MEMBRANA

MEMBRANA
Underlining Performance

RFA NO	CA NO

DO NOT SCALE THIS DRAWING

THIRD ANGLE PROJECTION

REQD	PART	DRAWING NUMBER	DESCRIPTION	MATERIAL	REMARKS

DRAWN BY SDM	01-16-02	APPROVED FOR CONSTRUCTION	
CHECKED BY			
APPROVED BY		SUPERSEDES	
APPROVED BY		SUPERSEDED BY	
APPROVED BY			

SHEET NO 1 OF 1
SCALE 1=2

DRAWING NUMBER: SMC-0104-12-5638
REVISION: 1
PLAN FILE NO | POCKET NO | FOLDER NO

REF MACHINE

DRAWING TITLE 4 X 13 PP HOUSING 3/4" JIS PORTS

12-5638 PLOTTED:

DWG. NO. SMC-0104-12-5638